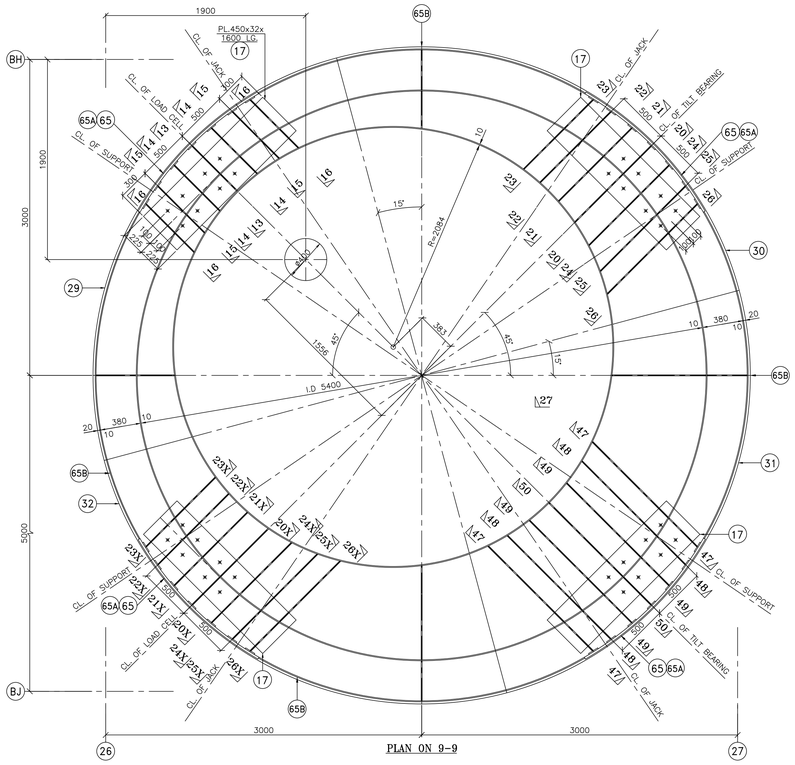

PLAN ON 9-9

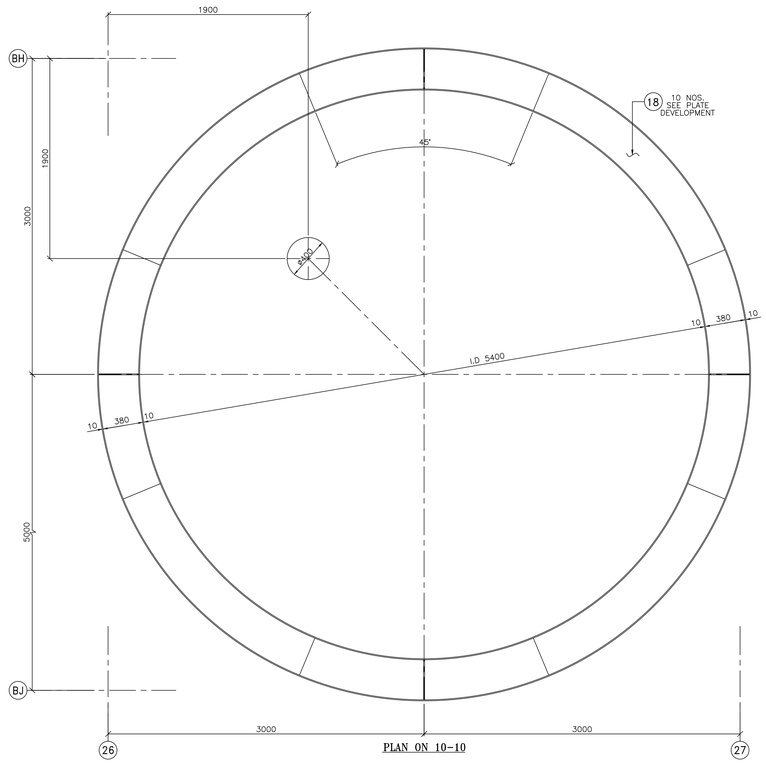

PLAN ON 10-10

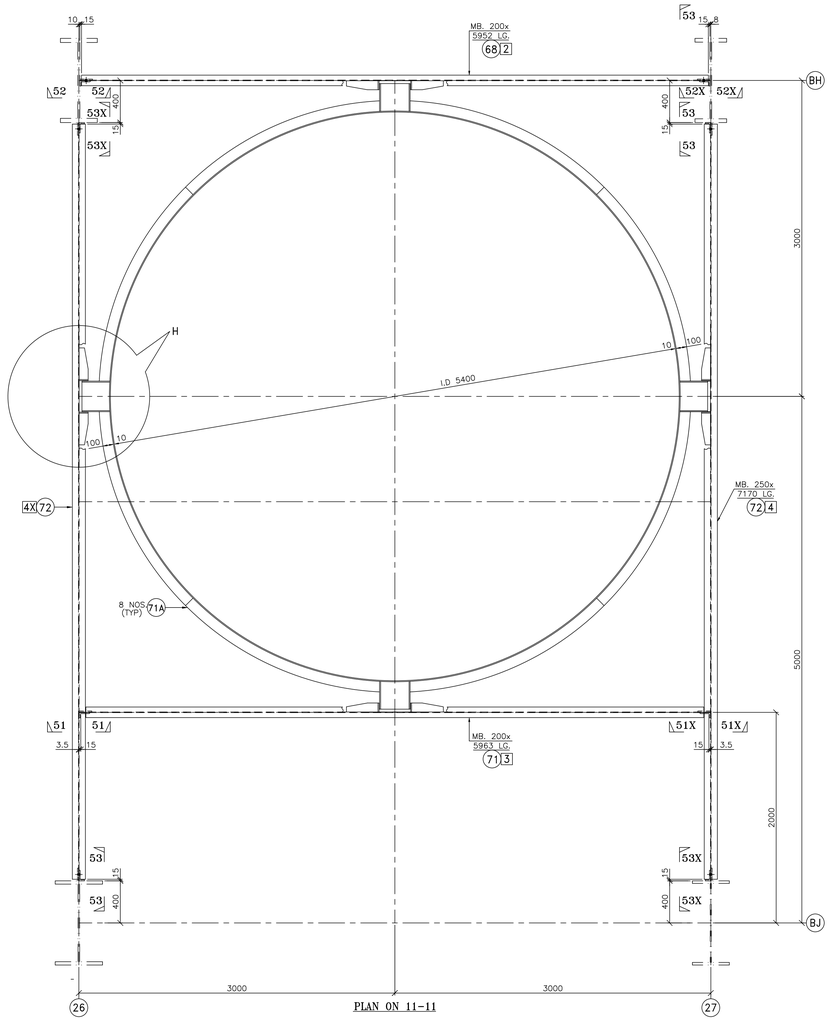

PLAN ON 11-11

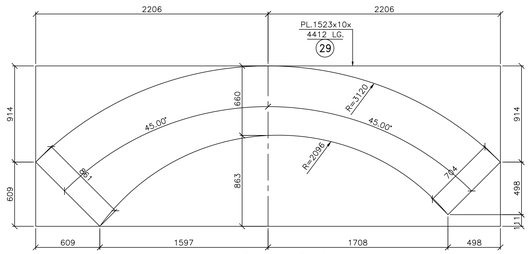

DET. OF ITEM NO. 29

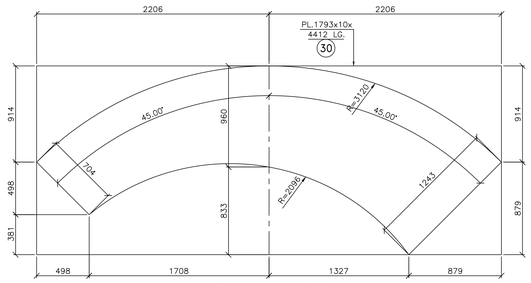

DET. OF ITEM NO. 30

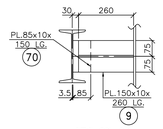

SEC 27-27

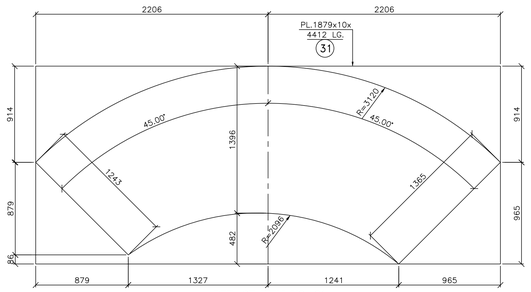

DET. OF ITEM NO. 31

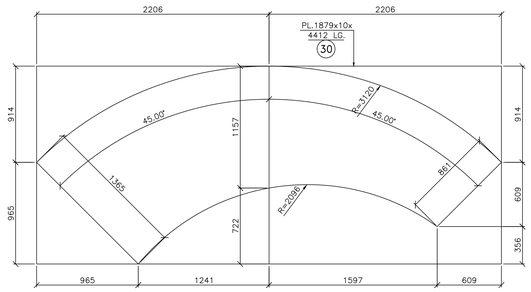

DET. OF ITEM NO. 32

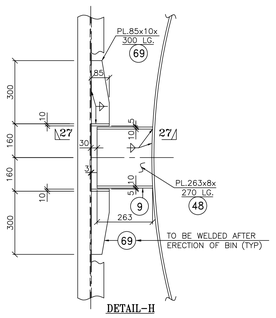

DETAIL-H

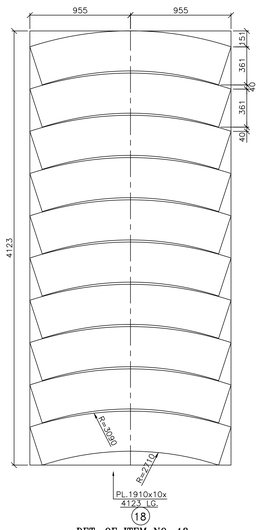

DET. OF ITEM NO. 18

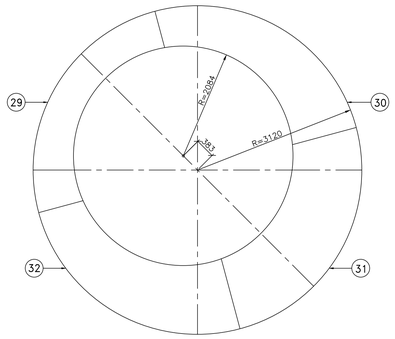

PLAN ON 9-9
(ONLY ITEM 29,30,31 & 32 SHOWN)

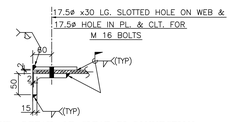

TYP. DETAIL OF CLEAT PL.CONNECTION.

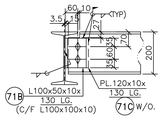

VIEW 51-51 (AS DRN.)
VIEW 51X-51X (OPP. HAND.)

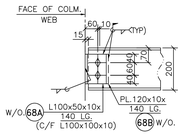

VIEW 52-52 (AS DRN.)
VIEW 52X-52X (OPP. HAND.)

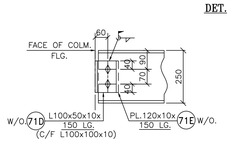

VIEW 53-53 (AS DRN.)
VIEW 53X-53X (OPP. HAND.)

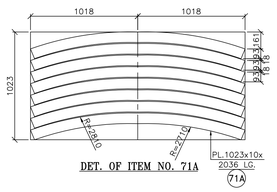

DET. OF ITEM NO. 71A

N O T E S .

1. ALL DIMENSIONS AND LEVELS ARE IN M.M
2. FOR GENERAL NOTES AND INSTRUCTIONS FOR DETAILING/FABRICATION REFER DRG.NO.MEC/A4/Q6GY/01/12/2001 (SHT-1 TO 15)
3. FOR REF. DESIGN DRG. NO- MEC/A1/Q6GY/01/12/BALLING/2136 (SH. 1 OF 3 TO 3 OF 3)
4. ALL DIAGONAL MEMBERS & SHAPE & SIZE TO BE VERIFIED BY ACTUAL LAYOUT.
5. THIS DRG. SHOULD BE READ TOGETHER WITH DRG. NO. 3398/ 1 OF 5, 3 OF 5 TO 5 OF 5.
6. FOR ITEMS (29) TO (32) CENTRES FOR R=3120 & 2096 ARE SHOWN IN 9-9.

REV. SC.	CONCURRED BY.

REV.No.	DATE	ZONE	DESCRIPTION	BY	VERIFIED

REVISION

REFERENCES	DRG.No.