DRG. No. MEC/11/12/Q6YM/DE/41/0560

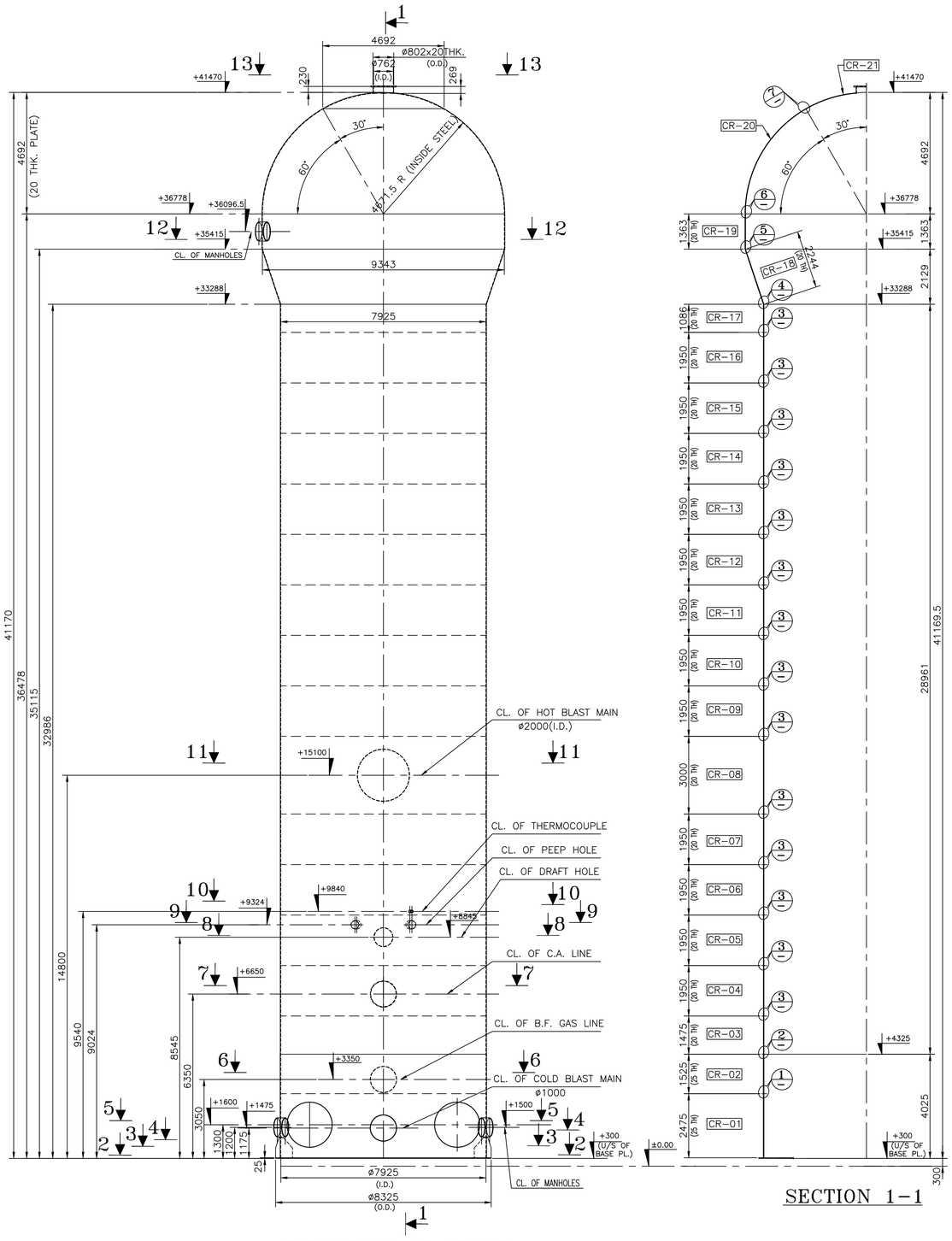

ELEVATION OF STOVE

SECTION 1-1

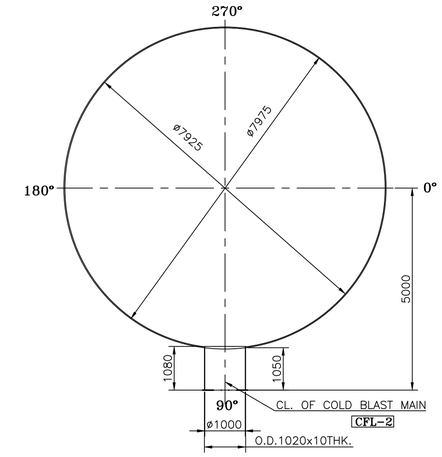

SECTION 4-4

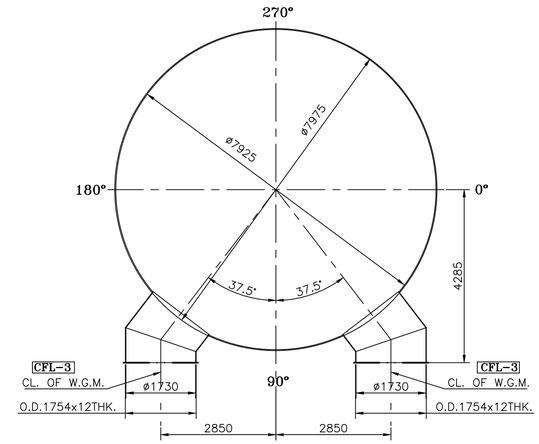

SECTION 5-5

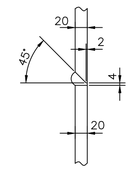

DETAIL "3"

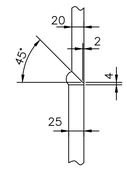

DETAIL "2"

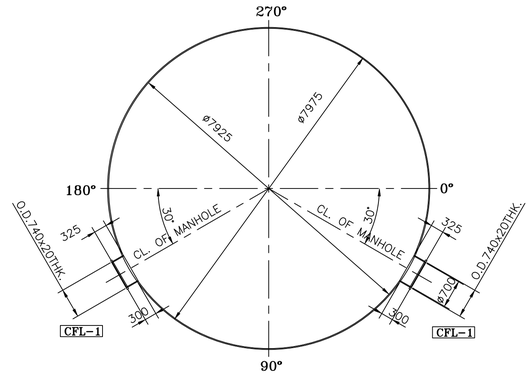

SECTION 3-3

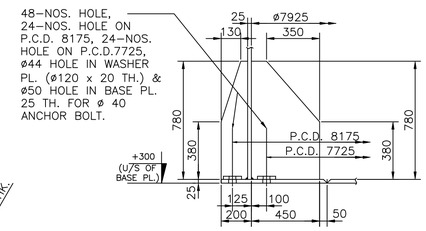

SECTION 14-14

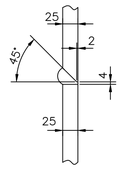

DETAIL "1"

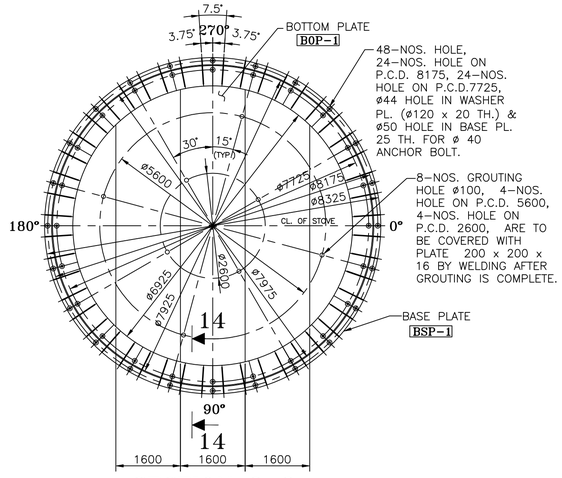

SECTION 2-2

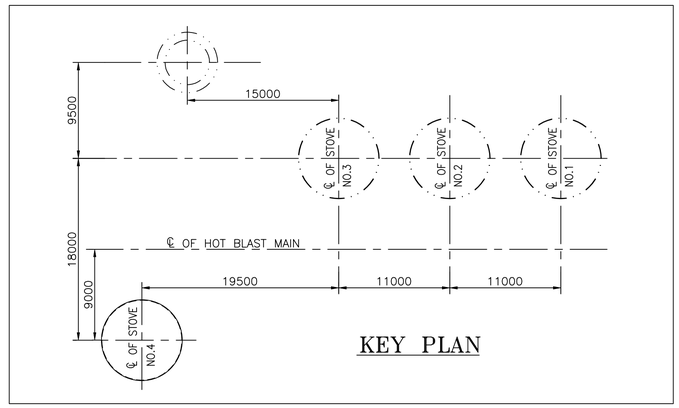

KEY PLAN

NOTES :-
1. ALL DIMENSIONS AND LEVELS ARE IN mm.
2. ±0.00 CORRESPONDS TO 483.6 m. ABSOLUTE.
4. HOLES IN FURNACE SHELL MAY BE MADE BY OXYGEN CUTTING OR DRILLING. PUNCHING OF HOLES IS NOT ALLOWED.
5. BUTT WELD SHALL BE TESTED ULTRASONICALLY & RADIOGRAPHICALLY
   I) ULTRASONIC TESTING – 100% OF WELDMENT
   II) RADIOGRAPHIC TESTING – 3% OF WELDMENT FOR MANUAL OR SEMIAUTOMATIC WELDING
   – 1.5% OF WELDMENT FOR AUTOMATIC WELDING
6. SHELL SHALL BE PAINTED WITH ONE COAT OF HEAT RESISTANT ALUMINIUM PAINT (35) OF APPROVED QUALITY, BOTH ON INSIDE & OUTSIDE, SURFACES AFTER REQUIRED SURFACE PREPARATION (SAND BLASTING) SUBSEQUENTLY DURING ERECTION, THE SHELL SHALL RECEIVE ON OUTSIDE SURFACE ONE COAT OF SAME PRIMER (35 MICRON) FOLLOWED BY TWO COATS OF HEAT RESISTANT ALUMINIUM PAINT (25 PER COAT) OF APPROVED QUALITY. QUALITY OF PAINT SHALL CONFORM TO IS:13183–1991.
7. THIS DRAWING IS TO BE READ IN CONJUNCTION WITH. MEC/11/12/Q6YM/DE/41/0560 (SH. 02 OF 02)

REV/SEC	CONCURRED BY

REV.NO.	DATE	ZONE	DESCRIPTION	BY	VERIFIED

REVISIONS

REFERENCES	DRG. NO.

STRUCTRAL		RECONSTRUCTION OF BF NO. 1	
LOCATION	RANCHI	1750 m³ BLAST FURNACE	
DESIGNED	–	STOVE SHELL	
DRAWN	–	ARRANGEMENT OF NEW STOVE NO.–4	
CHECKED AND VERIFIED	–		
APPROVED	SIG.	SCALE – 1:50	SHEET / REV.
	DATE	DRG. No. MEC/11/12/Q6YM/DE/41/0560	1 OF 2 / O