DRG. No. MEC/11/12/Q6YM/DE/41/0561

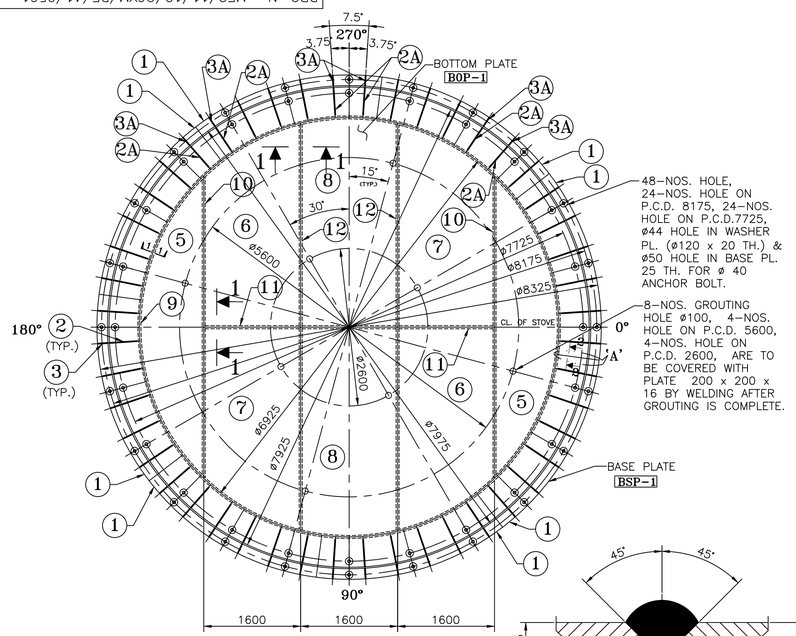

DETAIL OF BASE PLATE
MKD. BSP-1
DETAIL OF BOTTOM PLATE
MKD. BOP-1

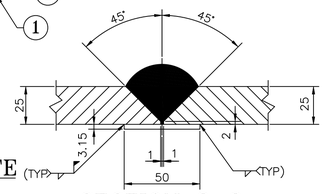

SECTION 2-2

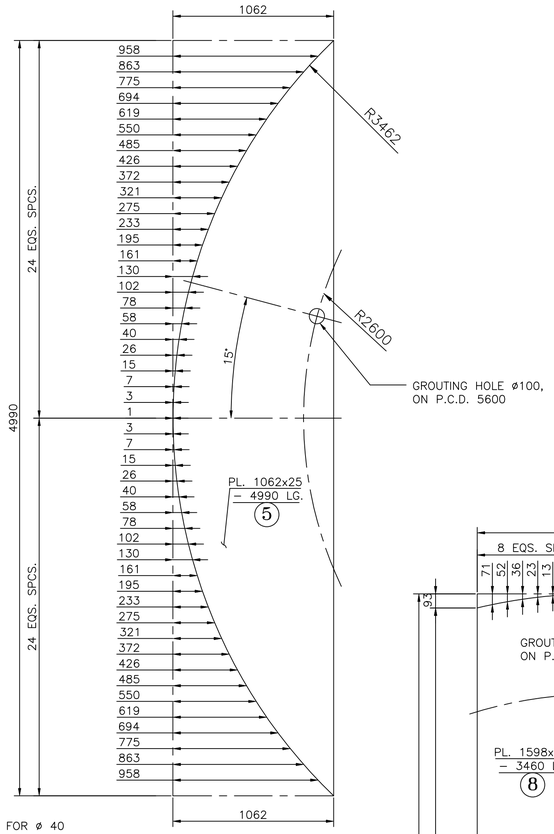

DETAIL OF ITEM NO.-5
(QTY. 2 NOS.)

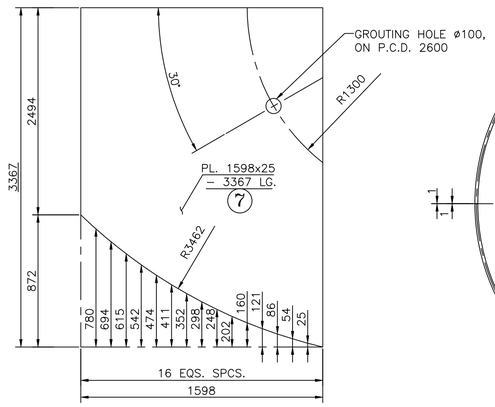

DETAIL OF ITEM NO.-7
(QTY. 2 NOS.)

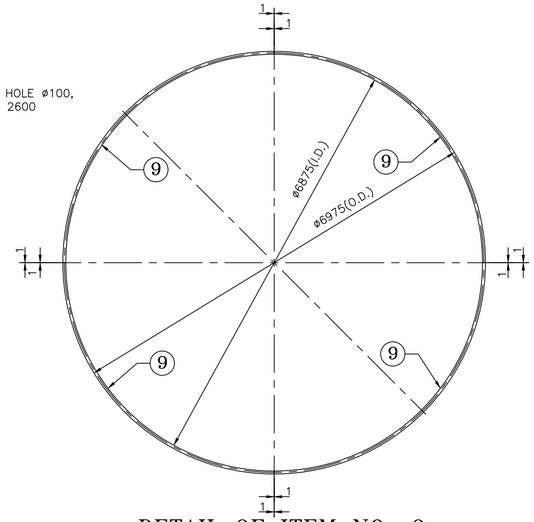

DETAIL OF ITEM NO.-9

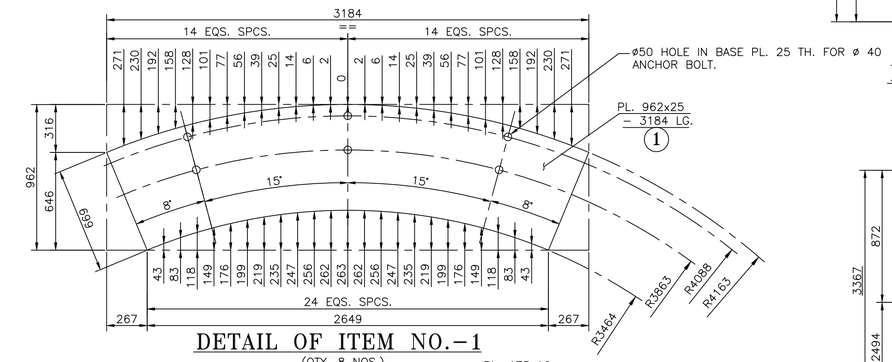

DETAIL OF ITEM NO.-1
(QTY. 8 NOS.)

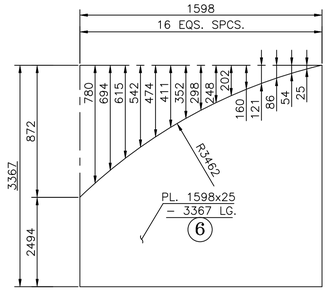

DETAIL OF ITEM NO.-6
(QTY. 2 NOS.)

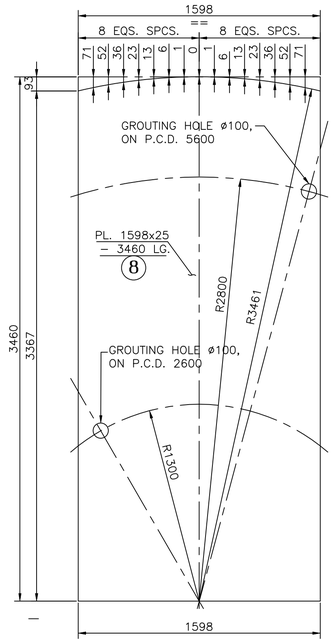

DETAIL OF ITEM NO.-8
(QTY. 2 NOS.)

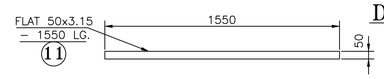

DETAIL OF ITEM NO.-11
(QTY. 3 NOS.)

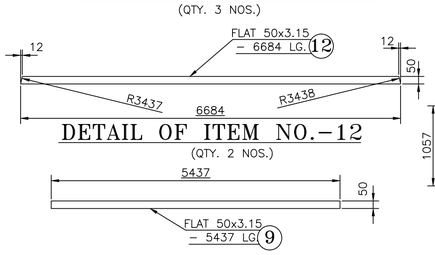

DETAIL OF ITEM NO.-12
(QTY. 2 NOS.)

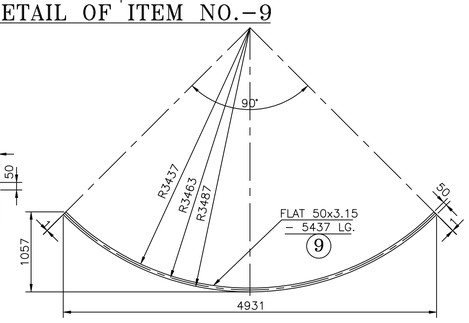

DETAIL OF ITEM NO.-9
(QTY. 4 NOS.)

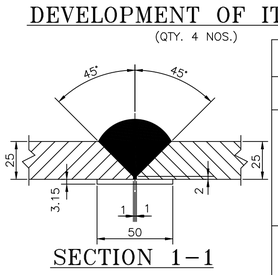

DEVELOPMENT OF ITEM NO.-9
(QTY. 4 NOS.)

SECTION 1-1

BILL OF MATERIALS

ERECTION MARK	ITEM NO.	MAT. SPECS.	SECTION	LENGTH IN mm.	NOS. REQD.	UNIT WT.	TOTAL WT.	EREC. NOS.	WT. FOR ALL EREC.	REMARKS
BSP-1	1	SEE ABSTRACT	PL.962x25	3184	8	196.25	4808.92			
	2		PL.450x16	780	42	125.6	1851.60			
	3		PL.175x16	780	42	125.6	720.06			
	2A		PL.450x16	300	6	125.6	101.74			
	3A		PL.175x16	300	6	125.6	39.56			
	4		FLAT 50x3.15	680	8	1.24	6.75			
							7528.63	1	7528.63	
BOP-1	5		PL.1062x25	4990	2	196.25	2080.01			
	6		PL.1598x25	3367	2	196.25	2111.83			
	7		PL.1598x25	3367	2	196.25	2111.83			
	8		PL.1598x25	3460	2	196.25	2170.16			
	9		FLAT 50x3.15	5437	4	1.24	26.97			
	10		FLAT 50x3.15	4993	2	1.24	12.38			
	11		FLAT 50x3.15	1550	3	1.24	5.77			
	12		FLAT 50x3.15	6684	2	1.24	16.58			
							8535.53	1	8535.53	

TOTAL WT.= 16064.16 KG.= 16.064 T.

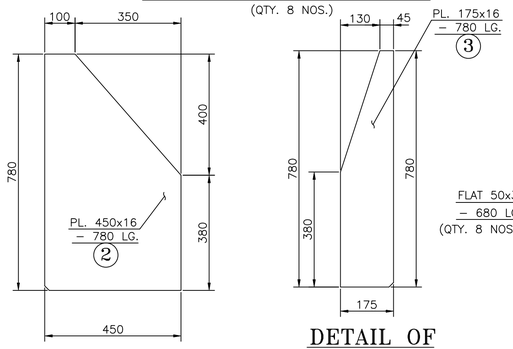

DETAIL OF ITEM NO.-2
(QTY. 42 NOS.)

DETAIL OF ITEM NO.-3
(QTY. 42 NOS.)

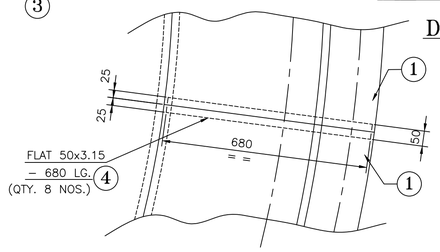

DETAIL – A

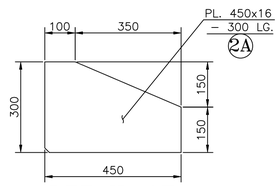

DETAIL OF ITEM NO.-2A
(QTY. 6 NOS.)

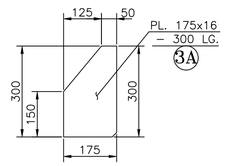

DETAIL OF ITEM NO.-3A
(QTY. 6 NOS.)

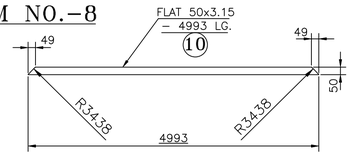

DETAIL OF ITEM NO.-10
(QTY. 2 NOS.)

ABSTRACT

SL.NO.	SECTIONS	WT. IN KGS.	REMARKS
1	PL. 16 THK.	2712.96	ASTM A516 GR.70
2	PL. 25 THK.	13282.75	ASTM A516 GR.70
3	FLAT 50x3.15	68.45	IS:808-1989

NOTES :-
1. ALL DIMENSIONS AND LEVELS ARE IN mm.
2. ±0.00 CORRESPONDS TO 483.6 m. ABSOLUTE.
3. FOR MARKING REF. DRG. MEC/11/12/Q6YM/DE/41/0560 (SH. 01 OF 02 & 02 OF 02)
4. ALL PLATE ARE TO BE CUT AFTER VERIFICATION OF DIMENSIONS AS PER FULL SCALE SHOP LAYOUT.

REV.					
SEC	CONCURRED BY				

REV.NO.	DATE	ZONE	DESCRIPTION	BY	VERIFIED

REVISIONS

REFERENCES | DRG. NO.

STRUCTRAL		
LOCATION	RANCHI	
DESIGNED	–	
DRAWN	–	
CHECKED AND VERIFIED	–	
APPROVED	SIG.	
	DATE	

RECONSTRUCTION OF BF NO. 1

1750 m^3 BLAST FURNACE

STOVE SHELL

DETAIL OF BASE PLATE & BOTTOM PLATE. WITH BILL OF MATERIALS

SCALE – 1:50 | SHEET | REV.

DRG. No. MEC/11/12/Q6YM/DE/41/0561 | 1 OF 1 | O