DRG. No. MEC/11/12/Q6YM/DE/41/0563

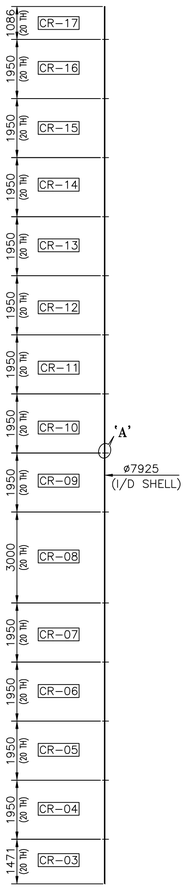

SECTION 1-1

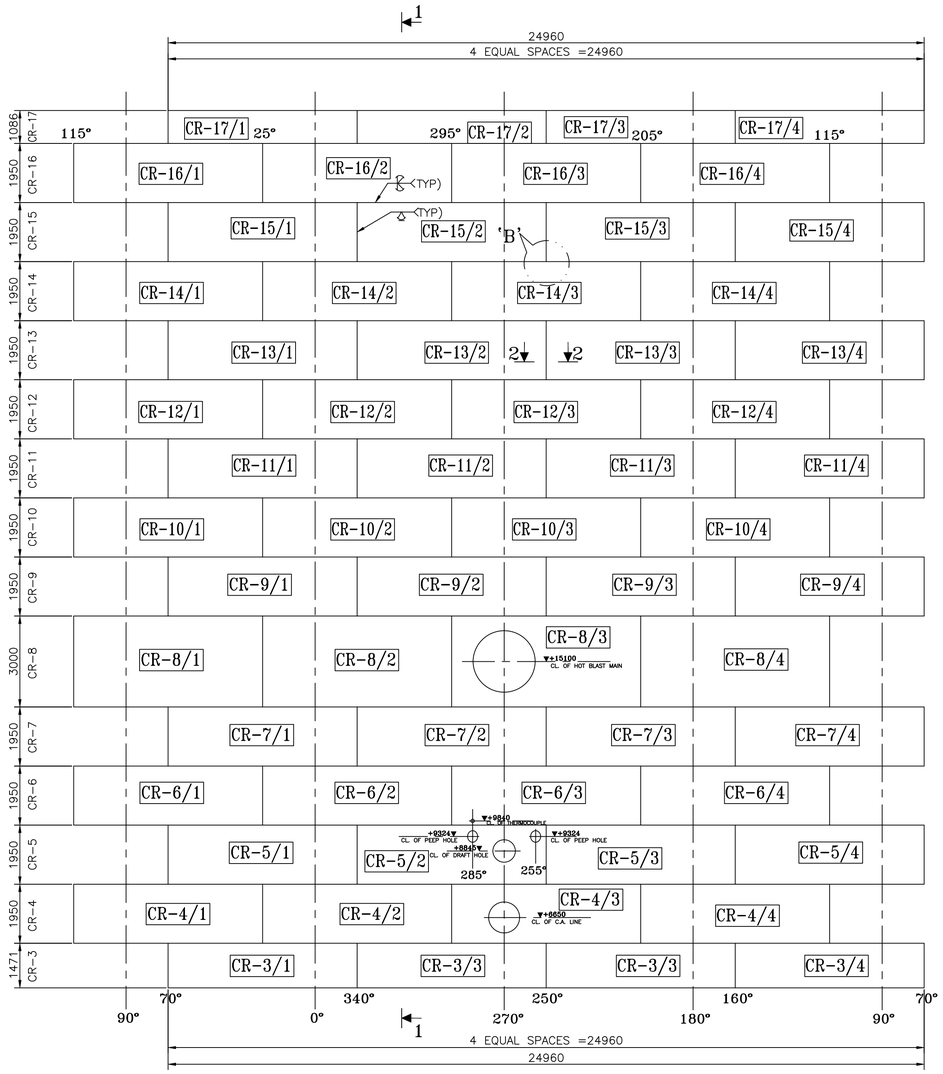

DEVELOPMENT OF COURSE CR-3 TO CR-18

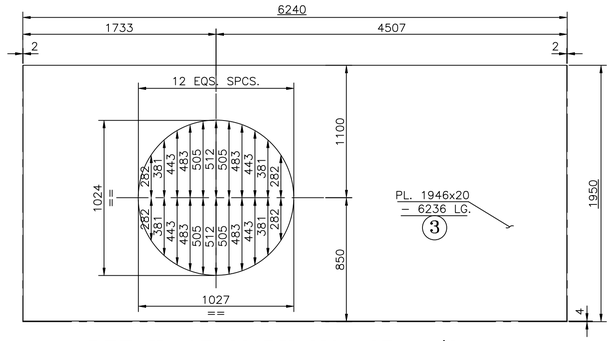

DETAIL OF MARK NO. CR-4/3

(QTY. 1 NO. EACH)

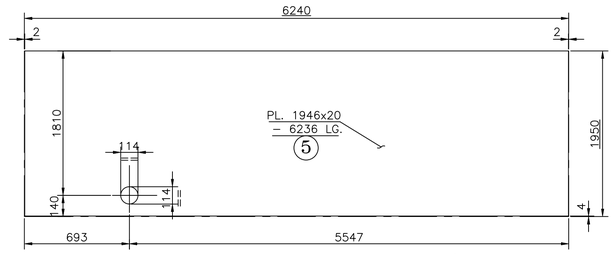

DETAIL OF MARK NO. CR-6/3

(QTY. 1 NO. EACH)

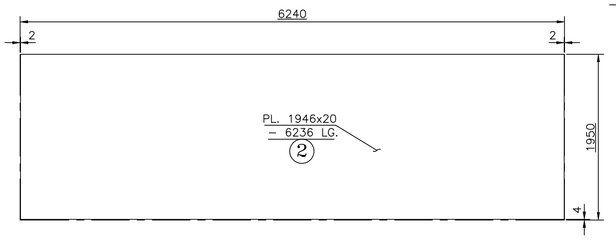

DETAIL OF MARK NO. CR-4/1,/2 & CR-4/4
DETAIL OF MARK NO. CR-5/1,/3 & CR-5/4

(QTY. 1 NO. EACH)

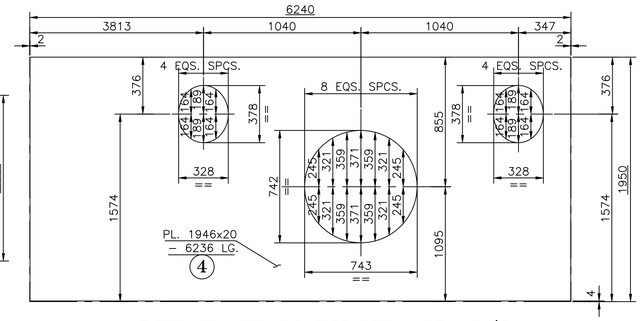

DETAIL OF MARK NO. CR-5/2

(QTY. 1 NO. EACH)

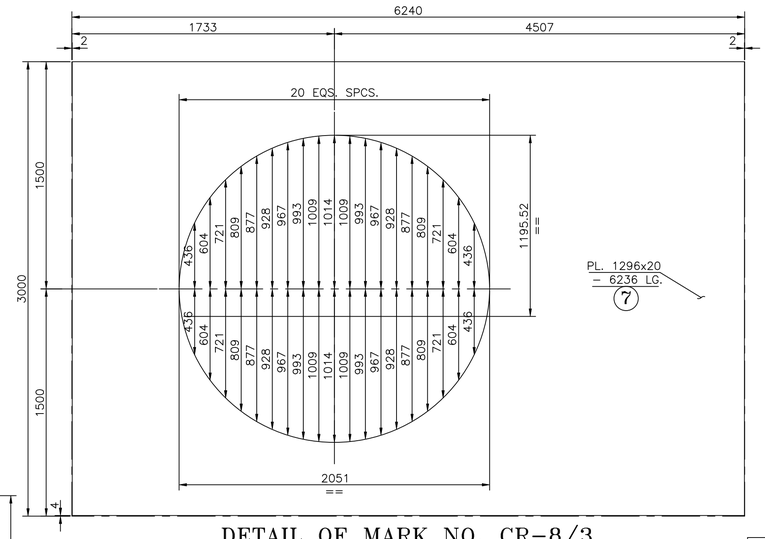

DETAIL OF MARK NO. CR-8/3

(QTY. 1 NO. EACH)

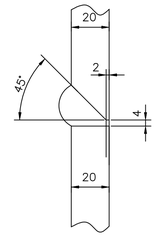

DETAIL 'A'

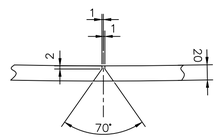

SECTION 2-2

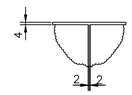

DETAIL 'B'

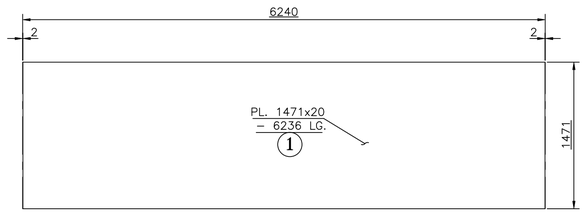

DETAIL OF MARK NO. CR-3/1 TO CR-3/4

(QTY. 1 NO. EACH)

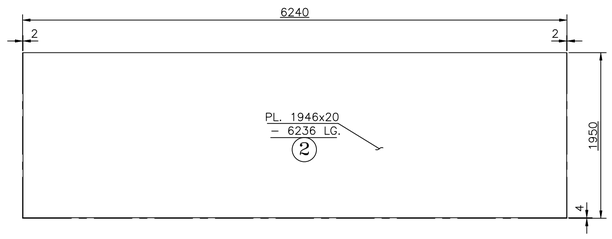

DETAIL OF MARK NO. CR-6/1,/2 & CR-6/4
DETAIL OF MARK NO. CR-7/1 TO CR-7/4

(QTY. 1 NO. EACH)

NOTES :–
1. ALL DIMENSIONS AND LEVELS ARE IN mm.
2. ±0.00 CORRESPONDS TO 483.6 m. ABSOLUTE.
3. FOR MARKING REF. DRG. MEC/11/12/Q6YM/DE/41/0560 (SH. 01 OF 02 & 02 OF 02)
4. ALL PLATE ARE TO BE CUT AFTER VERIFICATION OF DIMENSIONS AS PER FULL SCALE SHOP LAYOUT.
5. THIS DRAWING IS TO BE READ IN CONJUNCTION WITH. MEC/11/12/Q6YM/DE/41/0564

REV.	DATE	ZONE	DESCRIPTION	BY	VERIFIED

REVISIONS

REFERENCES | DRG. NO.

CONCURRED BY

STRUCTRAL		RECONSTRUCTION OF BF NO. 1
LOCATION	RANCHI	1750 m³ BLAST FURNACE
DESIGNED	–	STOVE SHELL
DRAWN	–	DETAIL OF COURSE MKD. CR-13 TO CR-17.
CHECKED AND VERIFIED	–	
APPROVED	SIG.	SCALE – 1:50 / SHEET / REV.
	DATE	DRG. No. MEC/11/12/Q6YM/DE/41/0563 / 1 OF 1 / O