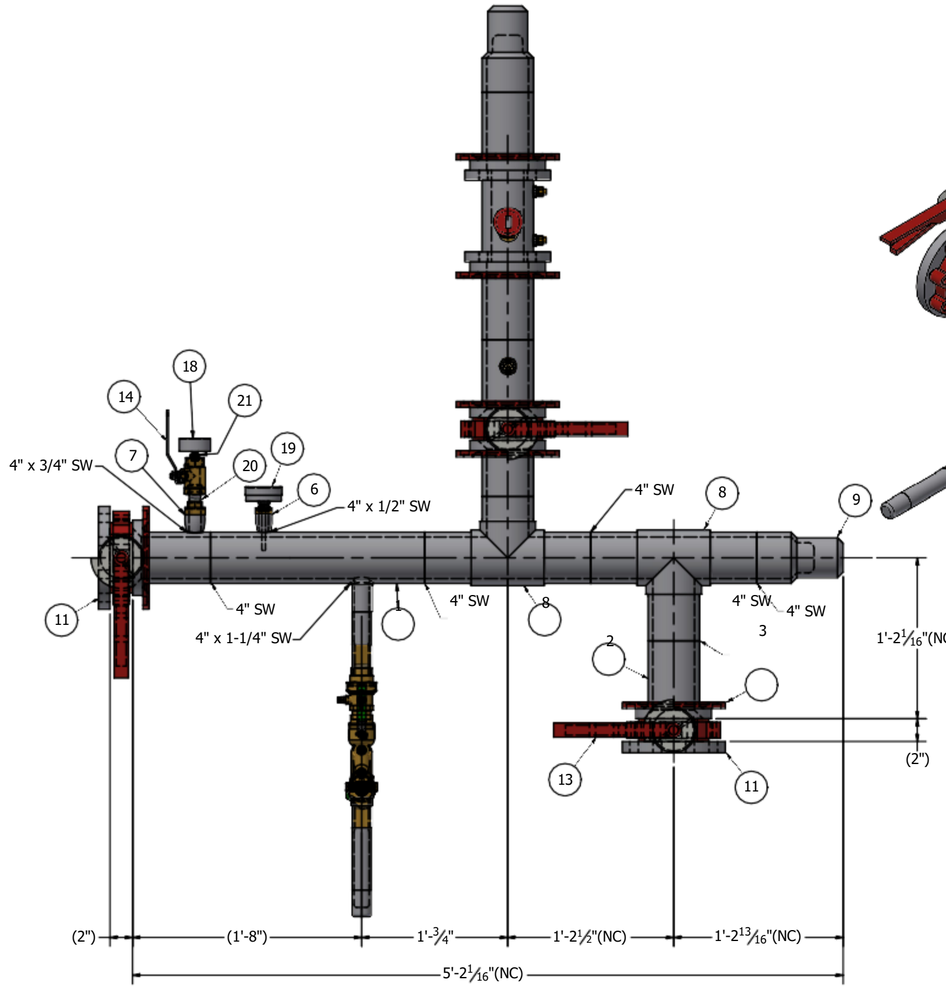

TOP VIEW

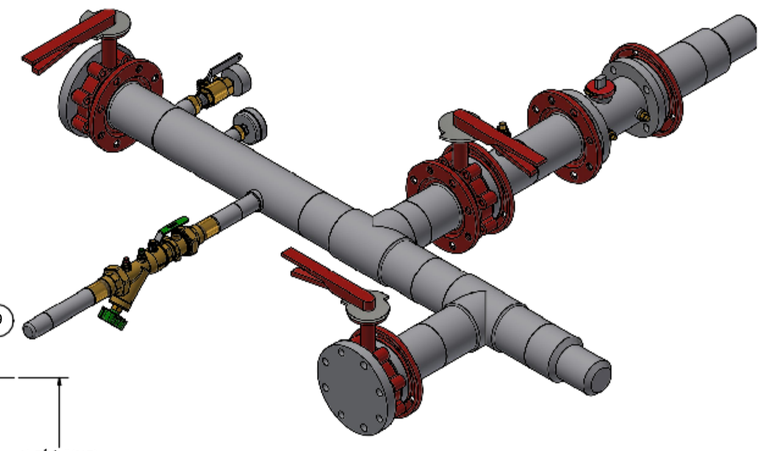

ISOMETRIC VIEW

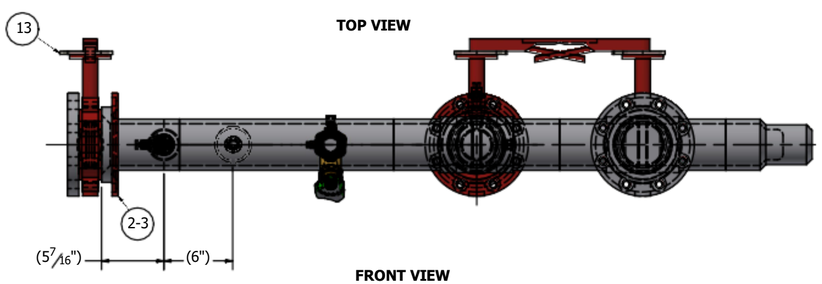

FRONT VIEW

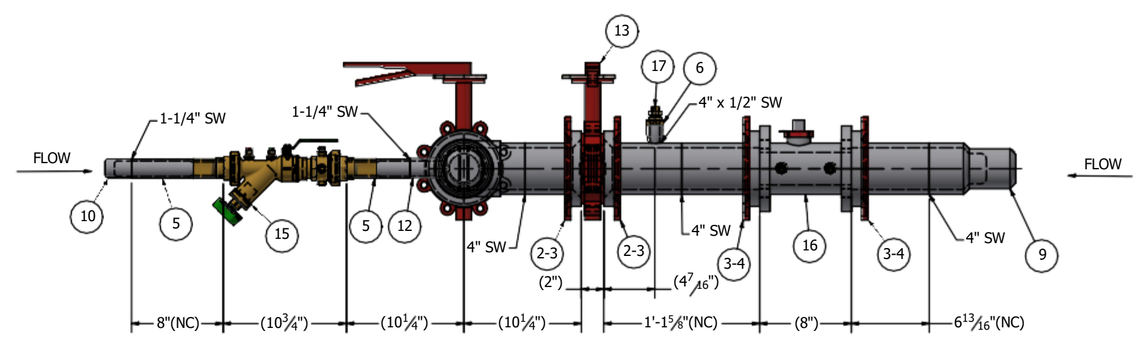

SIDE VIEW

DIMENSIONS, BALLOONS & WELDING TYPICAL FOR EACH CIRCUIT
SOME ITEMS HIDDEN FOR CLARITY

ESTIMATED MINIMUM WEIGHT: 52.2 lbmass

PARTS LIST

ITEM	QTY	PART NUMBER	DESCRIPTION
1	2 ft	10041121	4" DR 11 IPS HDPE PIPE
2	4	50041175	4" DR 11 BEVELED FLANGE ADAPTER (FROM IPP)
3	6	53040024	4" DR 11 IPS BACKUP RING DUCTILE IRON
4	2	50041119	4" DR 11 IPS FLANGE ADAPTER HDPE
5	2	53011125	1-1/4" DR 11 IPS HDPE x MPT TRANS FIT BRASS
6	2	53010158	1/2" SERIES 799 HEADER FITTING BRASS
7	1	53010000	3/4" SERIES 799 HEADER FITTING BRASS
8	2	50041123	4" DR 11 IPS TEE MOLDED HDPE
9	2	50041122	4" DR 11 IPS CAP MOLDED HDPE
10	1	50011121	1-1/4" DR 11 IPS CAP MOLDED HDPE
11	2	49040012	4" IPS BLIND FLANGE 1" THICK HDPE
12	1	50041154	4" x 1-1/4" DR 11 IPS BRANCH SADDLE ROUND BASE HDPE
13	3	59041117/ 59041118	4" S31H BRAY LUG BFV, LEVER OP
14	1	59009999	3/4" BRASS BALL VALVE
15	1	59019999	1-1/4" CBV WITH P/T PORT
16	1	59049999	4" CBV WITH P/T PORT
17	1	52000010	1/2" BRASS PT PORT
18	1	67020026	1/4" MPT BACK CONNECT PRESSURE GAUGE (2-1/2" DIAL, 0-100 PSI)
19	1	98000275	1/2" MPT 4" BACK STEM TEMPERATURE GAUGE (3" DIAL, 0-150 °F)
20	1	67000012	3/4" CLOSE NIPPLE
21	1	54001014	3/4" x 1/4" BRASS BUSHING
22	16 ft	98000972	4" CUSTOM LBF SS BOLTPACK (8) 5/8" OD STUDS
23	2	53041725	4" CBV (GALV STEEL) BOLTPACK
24	2	53041018	4" NEOPRENE GASKET

SHOP WELDS

SIZE	# OF WELDS
4"	8
4" x 1/2"	2
4" x 3/4"	1
1-1/4"	2
4" x 1-1/4"	1

[redacted]