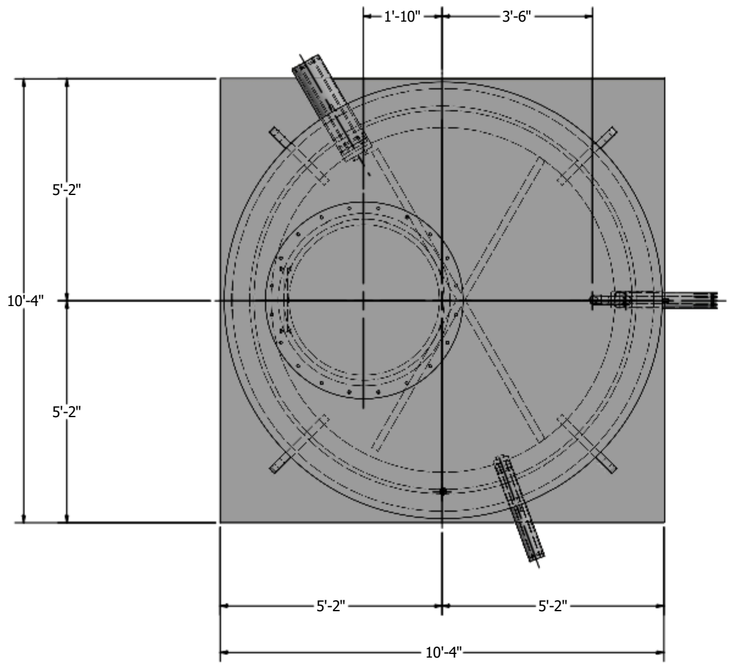

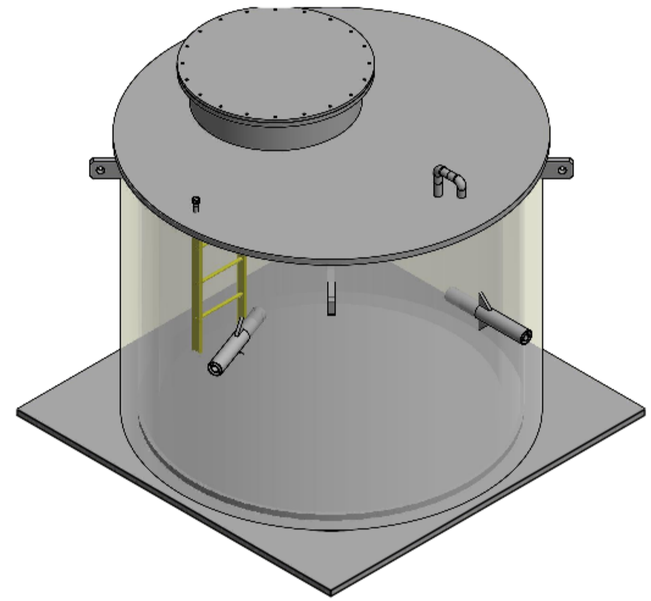

PARTS LIST			
ITEM	QTY	PART NUMBER	DESCRIPTION
1	1	29020010	HDPE BASE FROM 2" SHEET (124" SQ)
2	1	29020010	HDPE INNER BASE FROM 2" SHEET(108" OD)
3	7.5 ft	20965053	96" RSC 250 HDPE PROFILE WALL PIPE (96" ID)
4	8 ft	20085053	108" RSC 250 HDPE PROFILE WALL PIPE (108" ID)
5	1	29020010	HDPE TOP FROM 2" SHEET (122" OD)
6	1 ft	10483211	48" DR 32.5 IPS HDPE PIPE
7	1	49480010	48" HDPE WATER TIGHT FLANGE SET 55" OD w(20) 3/4" BH ON 52" BHC (INCLUDES NEOPRENE GASKET & BOLTPACK)
8	1	38040019	4" DR 11 IPS x 8" DR 17 IPS DC END TERMINATION HDPE
9	2.5 ft	10041121	4" DR 11 IPS HDPE PIPE
10	2.5 ft	10081717	8" DR 17 IPS HDPE PIPE
11	2	38040052	4" IPS x 8" DR 17 IPS END CENTRALIZER HDPE
12	2	38020022	2" DR 11 IPS x 4" DR 17 IPS DC END TERMINATION HDPE
13	5 ft	10021116	2" DR 11 IPS HDPE PIPE
14	4.5 ft	10041714	4" DR 17 IPS HDPE PIPE
15	4	38020051	2" IPS x 4" DR 17 IPS END CENTRALIZER HDPE
16	1	53011120	1" DR 11 IPS MPT TRANS FIT CARBON STEEL
17	1	98010123	1" THREADED CAP P.P.
18	7.5 ft	98000180	FIBERGLASS MANHOLE LADDER
19	4	29020010	EXTENDED LIFTING LUG FROM 2" HDPE SHEET
20	6	29010012	HDPE GUSSET FROM 1" SHEET (TYP 2 PER OUTLET)
21	3	98000207	LADDER INSTALLATION KIT
22	2	50021117	2" DR 11 IPS 90 DEG ELBOW MOLDED HDPE
23	1	99029999	2" BIRD SCREEN STAINLESS STEEL
24	2	29020010	HDPE SUPPORT RIB FROM 2" SHEET (4" TALL)

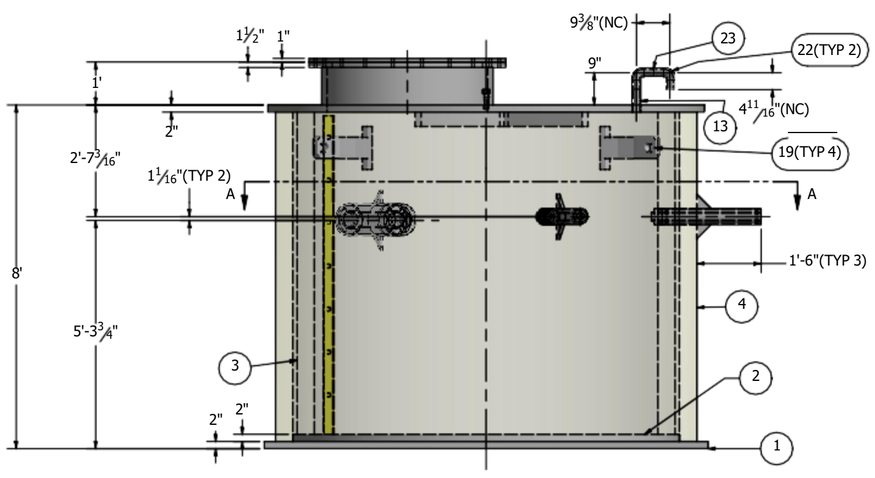

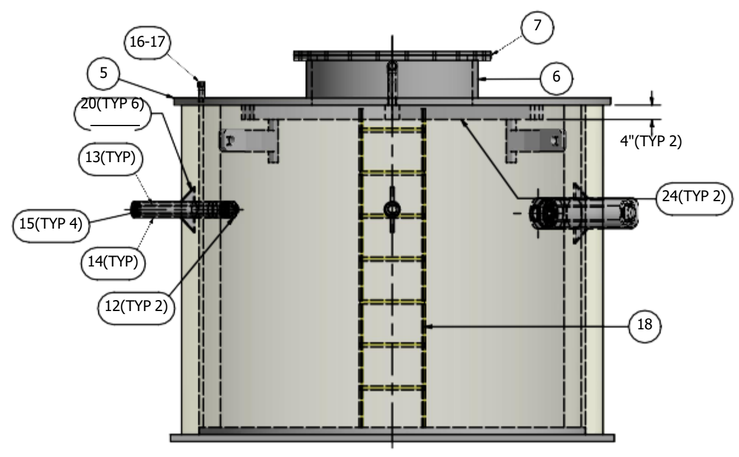

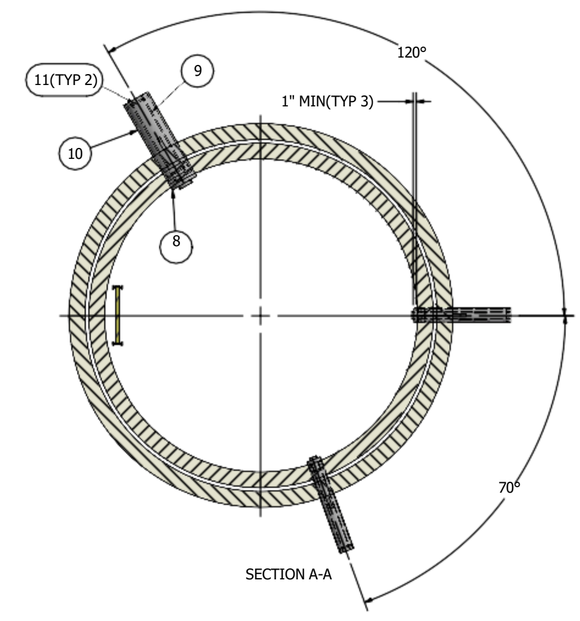

[redacted]