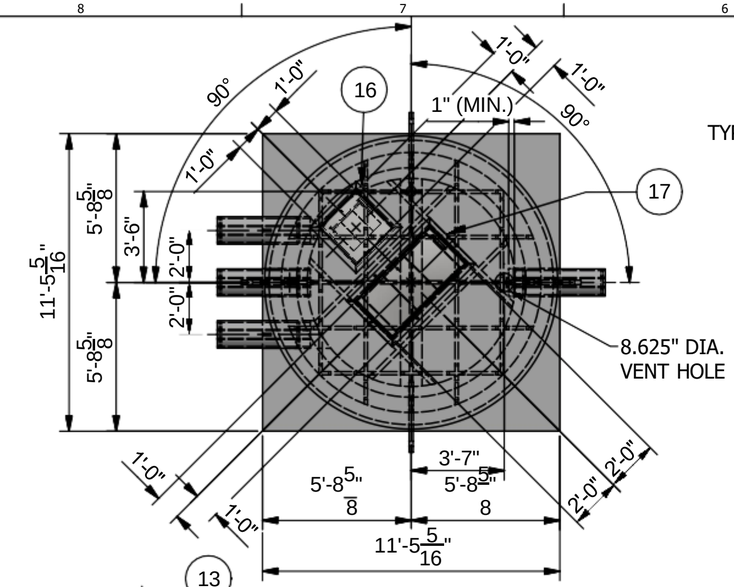

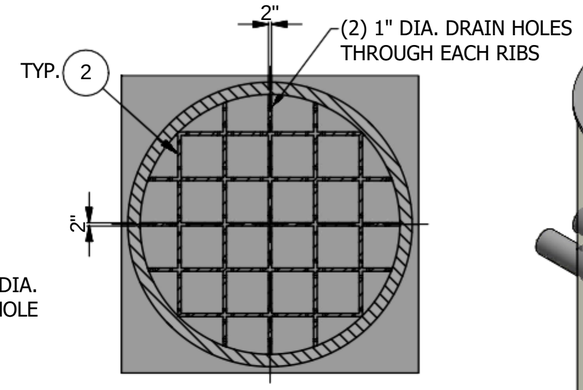

SECTION A-A

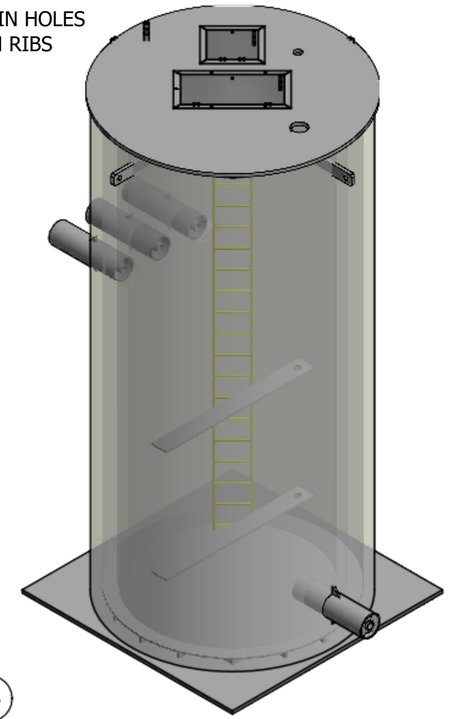

PARTS LIST			
ITEM	QTY	PART NUMBER	DESCRIPTION
1	1	29020010	HDPE BASE FROM 2" SHEET (137.3" SQ.)
2	14	29020010	HDPE SUPPORT RIBS FROM 2" SHEET (3" TALL. 10 RIBS ON BASE PLATE, 4 RIBS ON TOP PLATE)
3	1	29010012	HDPE INNER BASE FROM 1" SHEET (120" OD)
4	23.5 ft.	25969999	96" RSC 250 HDPE PROFILE WALL PIPE (96" ID)
5	23.5 ft.	25969999	120" RSC 250 HDPE PROFILE WALL PIPE (120" ID)
6	1	38121799	4" DR 11 IPS x 12" DR 17 IPS HDPE DC END TERMINATION
7	14.5 ft.	10041121	4" DR 11 IPS PIPE HDPE
8	14.5 ft.	10121714	12" DR 17 IPS PIPE HDPE
9	8	29010012	4" DR 11 IPS x 12" DR 17 IPS HDPE CENTRALIZER
10	0.5 ft.	10021116	2" DR 11 IPS PIPE HDPE
11	8	29010012	HDPE GUSSET FROM 1" SHEET (TYP. 2 PER OUTLET)
12	1	29020010	HDPE TOP FROM 2" SHEET (135.3" OD)
13	1	99029999	2" DR 11 IPS HDPE x S.S. MPT TRANSITION w/THREADED CAP
14	4	29020010	HDPE EXTENDED LIFTING LUG FROM 2" SHEET
15	22.5 ft.	98000180	FIBERGLASS MANHOLE LADDER w/LADDER INSTALLATION KIT PART #98000207 (MEETS OSHA STANDARDS)
16	1	99999999	ALUMINUM ACCESS DOOR (HALLIDAY-S1R2424)
17	1	99999999	ALUMINUM ACCESS DOOR (HALLIDAY-S1R2448)
18	2	29010012	HDPE PIPE SUPPORT FROM 1" SHEET

NOTE:-
OUTLETS NOT TO BE USED AS ANCHOR POINTS FOR CUSTOMER PIPING.

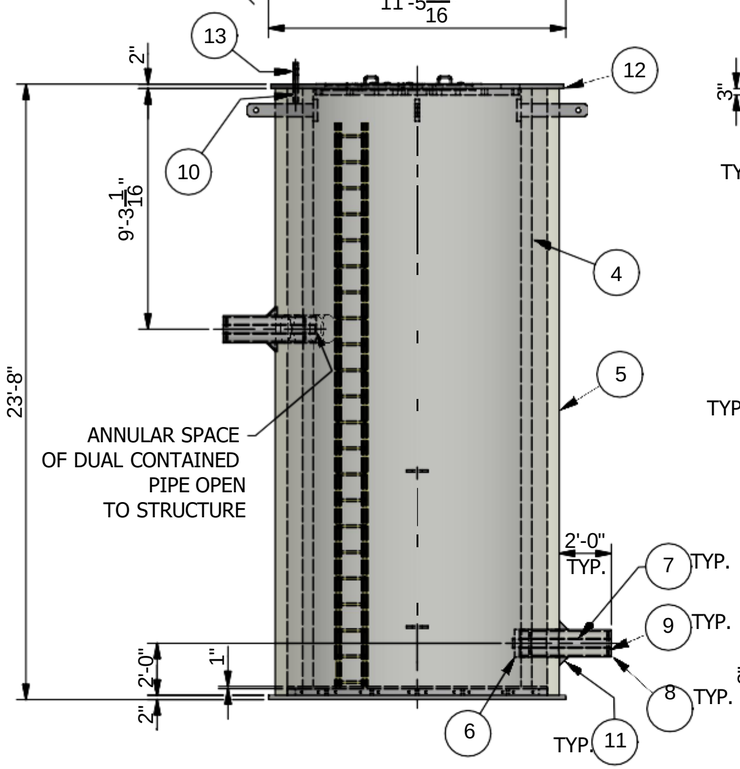

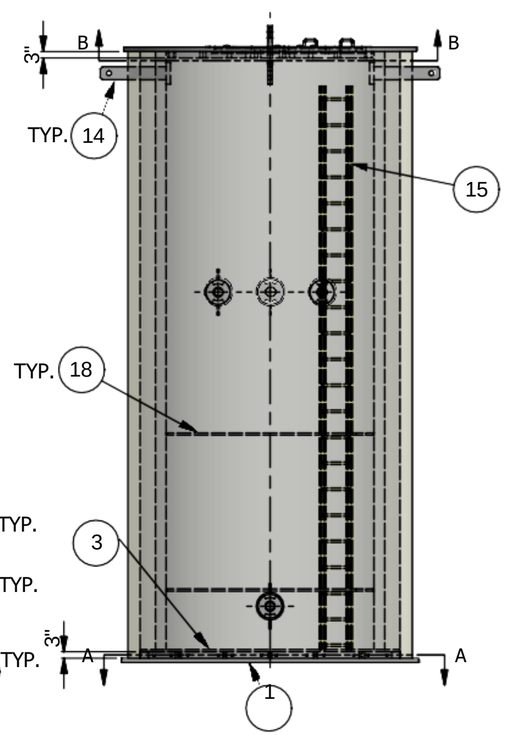

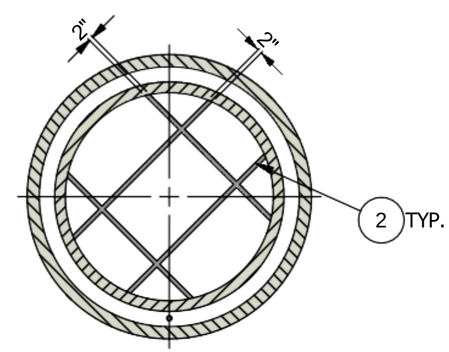

SECTION B-B