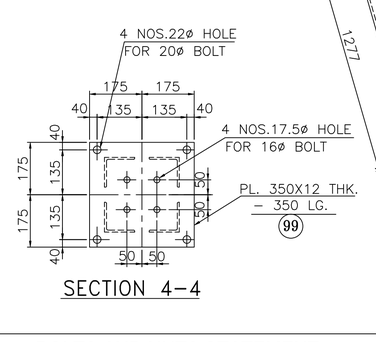

SECTION 4–4

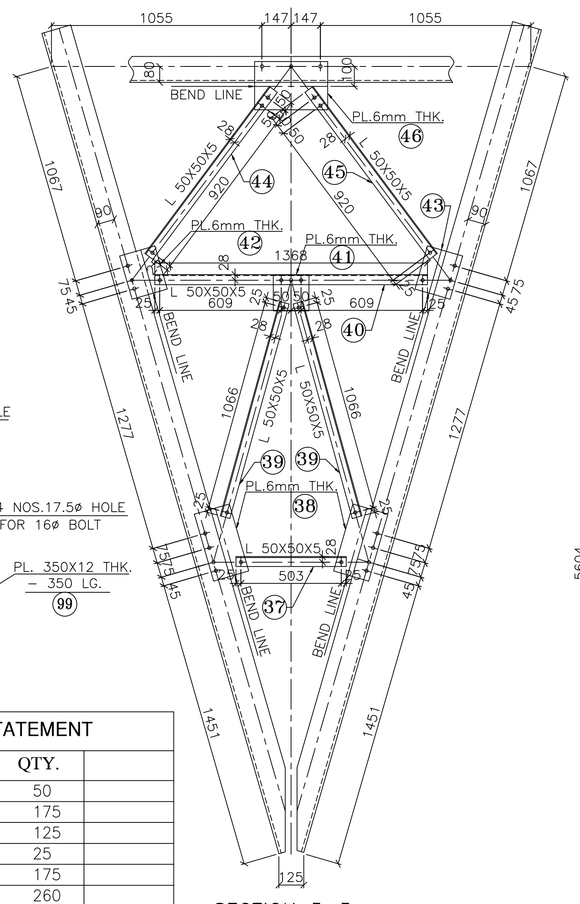

SECTION 5–5

BOLTS AND NUTS STATEMENT

SL. NO.	SIZE	QTY.	
1	ø 16 X 35 mm	50	
2	ø 16 X 40 mm	175	
3	ø 16 X 45 mm	125	
4	ø 16 X 50 mm	25	
5	ø 16 X 55 mm	175	
6	ø 16 X 60 mm	260	
7	ø 16 X 65 mm	300	
8	ø 16 X 70 mm	50	
9	ø 16 X 75 mm	140	
10	ø 16 X 85 mm	150	
11	ø 16 X 100 mm	170	
SPRING WASHERS FOR Ø16		1660	
STEP BOLT Ø 16x175		75	
PACKING WASHERS (30mm O.D.)			
	2 mm THICK	8	
	10 mm THICK	20	
	18 mm THICK	100	
	20 mm THICK	75	
	25 mm THICK	10	

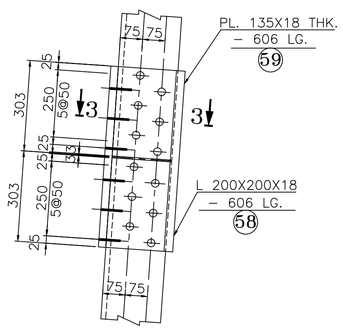

DETAIL 'D'

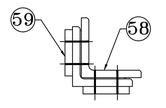

SECTION 3–3

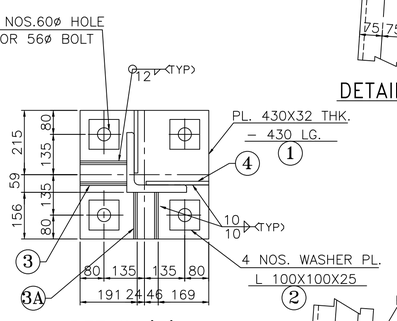

DETAIL 'E'

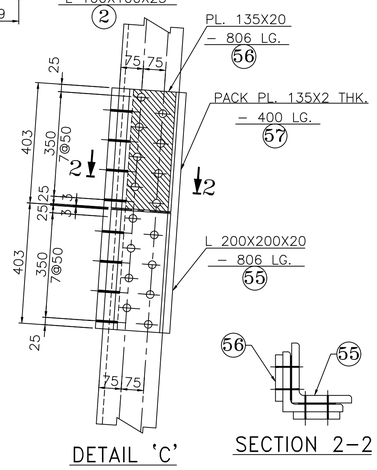

DETAIL 'C'

SECTION 2–2

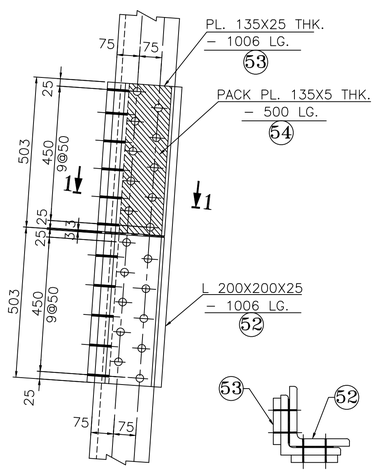

DETAIL 'B'

SECTION 1–1

NOTES:–

1. ALL DIMENSIONS ARE IN MM UNLESS OTHERWISE SPECIFIED.
2. THIS DRG. READ IN CONJUNCTION REF.DRG. NO. PDJ 155/STR TA1/ 1101 (SH. 1 OF 2)

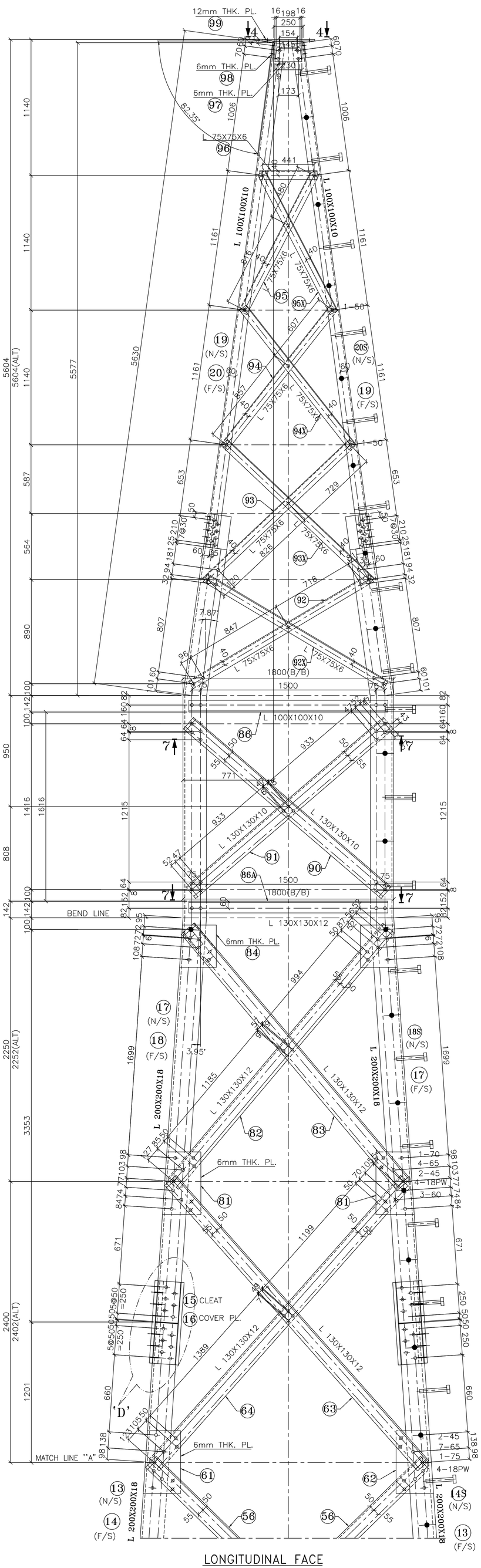

LONGITUDINAL FACE

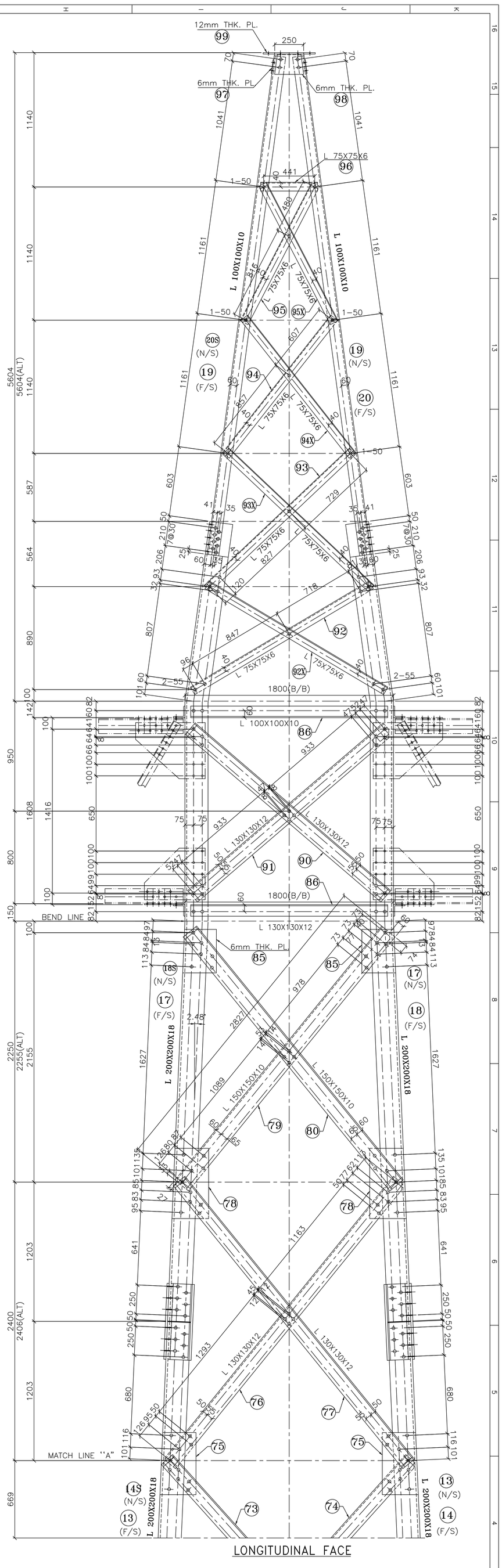

LONGITUDINAL FACE

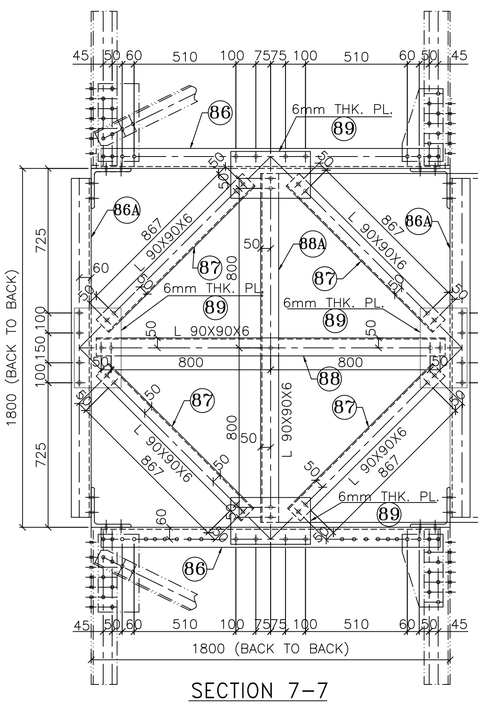

SECTION 7–7

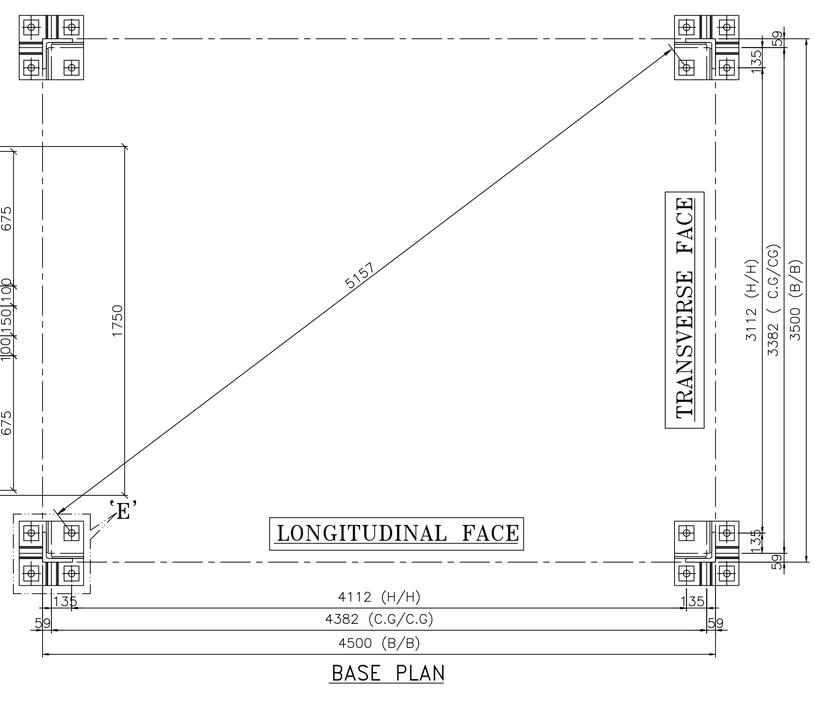

BASE PLAN

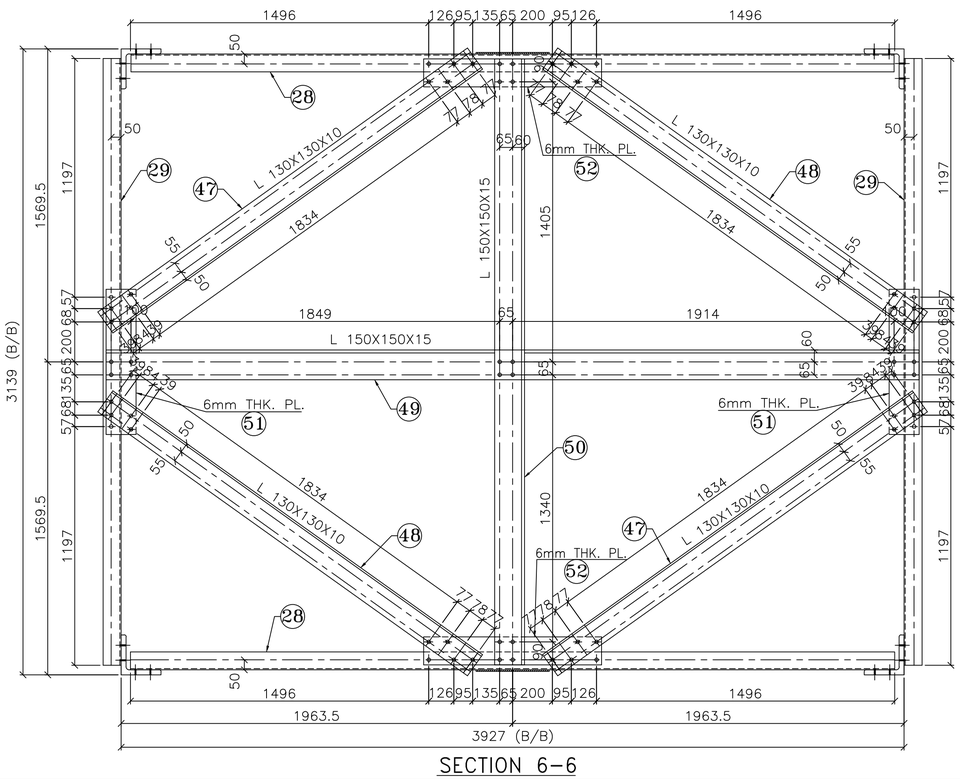

SECTION 6–6

REV NO.	DATE	DESCRIPTION	CHKD	APPD
0	20.12.2001			

LOA No : F.DTL/201/2008-09/OPR/OCM(T)SSC-II/F-43/1070T: 25.08.08
TENDER No : DOM(T) SSC-II/06-07/T-03
PROJECT : ESTABLISHMENT OF 400/220/66KV S/S AT MUNDKA, DELHI

SCALE : 1:10,15,20

TITLE : DETAILS OF 400 KV COLUMN TYPE – A1 AT 400 KV MUNDAKA S/S

DRG. No. PDJ 155/STR TA1/1101 SHEET No. 2 OF 2

REV. 0

	NAME	SIGN
DSND		
DRWN		
CHKD		
APPD		