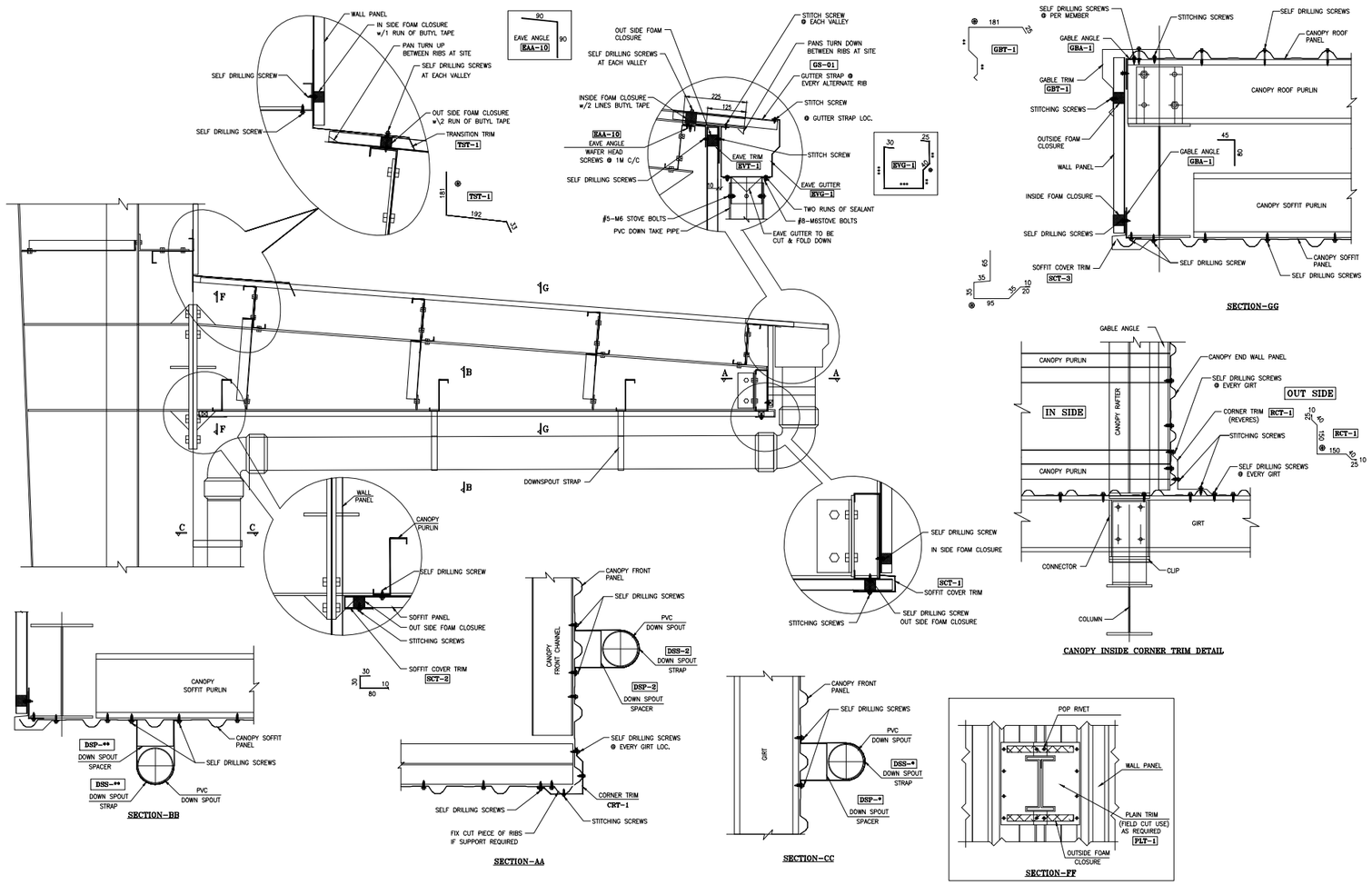

NOTE:-

1. DOWNSPOUT STRAPS (SUPPLIED STRAIGHT) ARE TO BE BENT TO SUIT DOWNSPOUT ON SITE. THE DOWNSPOUT IS THEN DRAWN AGAINST THE WALL PANEL AND FASTENED AS SHOWN IN SECTION-A,B & C.
2. G.I. CONNECTOR TO PVC DOWNSPOUT FIXING LOCATION USE SOLVENT CEMENT
3. PVC DOWNSPOUT TO DOWNSPOUT JOINT / PVC DOWNSPOUT TO PVC BEND LOCATION USE SOLVENT CEMENT.

DETAIL @ CANOPY WITH RETURN DOWNTAKE & SOFFIT

FOR REFRANCE ONLY

ALL DIMENSIONS ARE IN MM	TITLE : CANOPY DETAIL	DESIGN	SIGN	DATE	SHEET NO. : 07 OF 13
SCALE : 0		DRN. BY.		13.09.2025	TOTAL SHEET : 13 NOS.
REV. NO. 0	CLIENT :	CHKD. BY.			DRAWING NO. : SIPL/ENQ----------
		APPD. BY.			